ROUND 4 - Sunday, May 1, 2022

SHOTLINK

Mexico Open at Vidanta

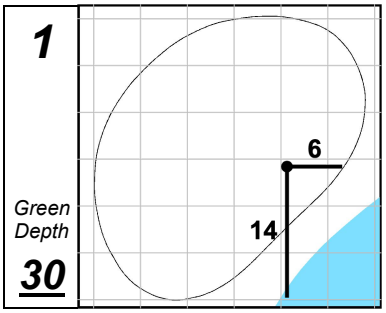

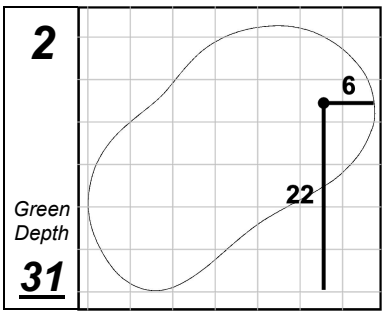

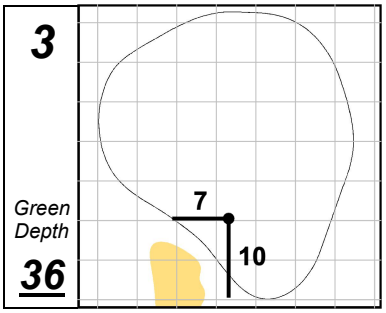

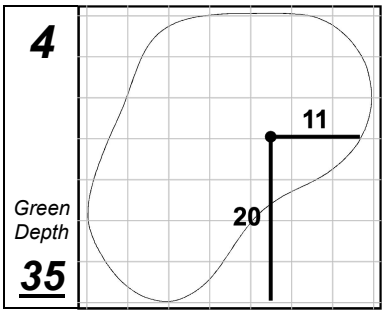

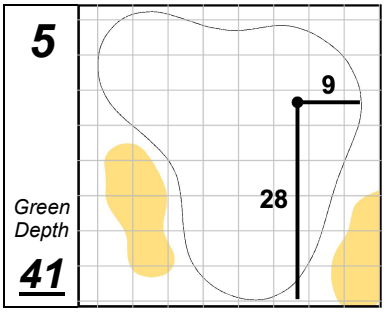

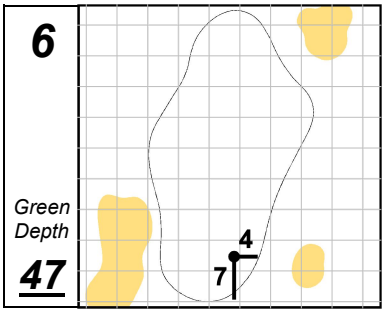

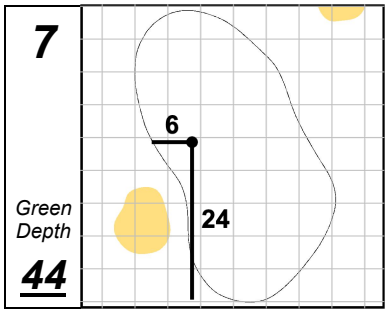

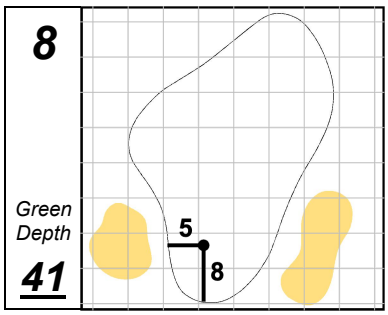

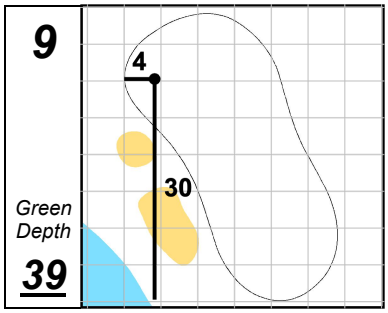

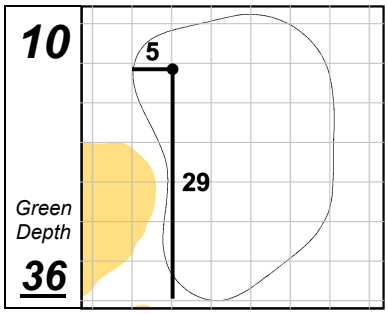

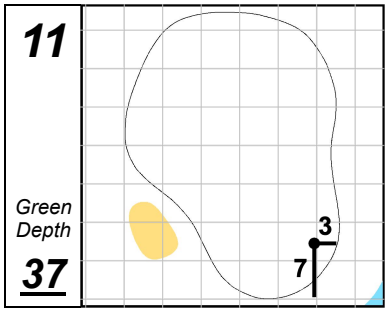

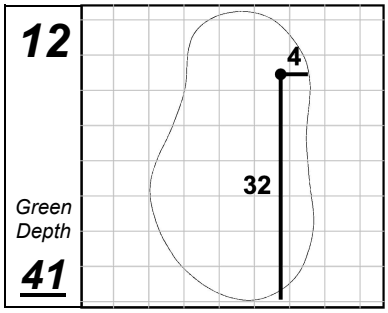

Vidanta Vallarta

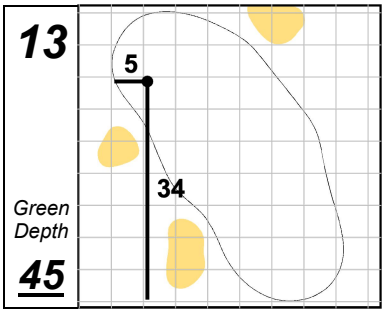

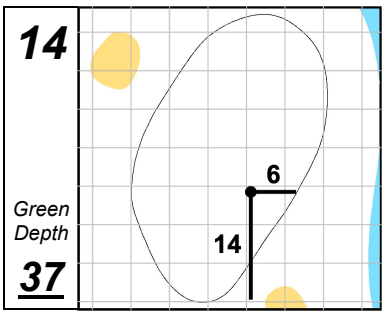

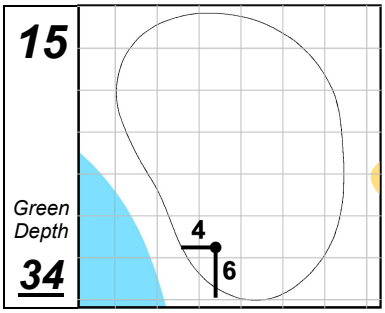

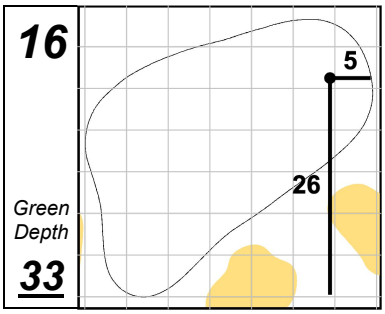

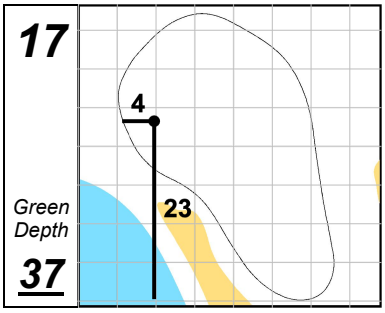

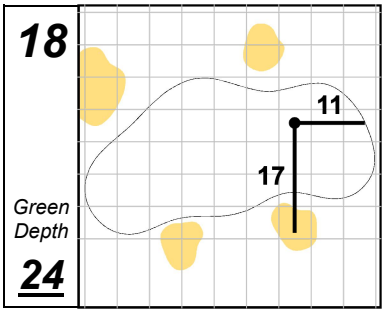

Each side of a complete square on the green represents 5 YARDS.

Saturday, April 30, 2022 11:29:39 AM